ELE214 - Electronics Laboratory I Preliminary Work 2

1 Questions

1. Plot the typical Zener diode characteristics and specify the breakdown voltage V_z, the minimum Zener current $I_{z,\,\min}$, and the threshold voltage V_o.

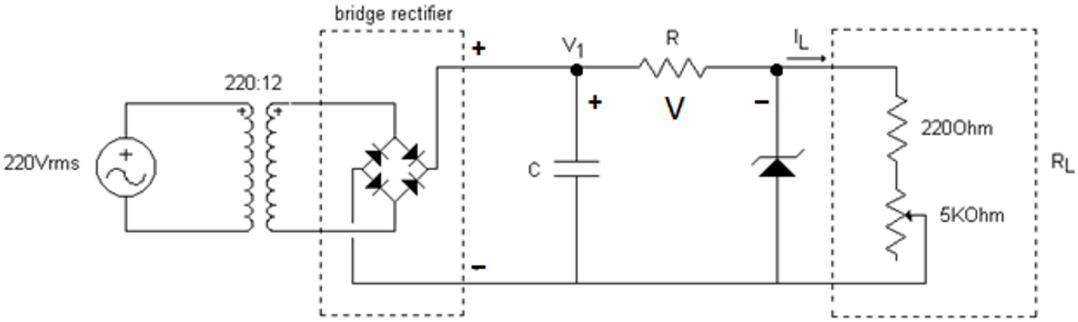

Circuit 1

The following questions are related to the regulator circuit shown in the figure. Zener diode characteristics are: $V_z = 7.5$ V, $I_{z,\,\min} = 20$ mA and $P_{z,\,\max} = 500$ mW.

2. Assume that ripple voltage is zero and calculate the voltage denoted as V_1.

3. For load resistance R_L varying between 220 and 5220 ohms, calculate maximum ($I_{L,\,\max}$) and minimum ($I_{L,\,\min}$) load currents flows through Zener diode.

4. Assuming the Zener diode is dissipating its maximum power, load current values are as calculated in part 3, and load voltage (V_L) is constant at 7.5 V, what should be the value of the resistor R?

5. Assuming that $R = 150\ \Omega$, calculate the maximum value of V_1 that will cause the Zener diode to be burnt.

Experimental Work (Simulation of 2-3)

1. With the available components on the desk, design and set up a circuit to obtain the characteristic curve of a Zener diode on the oscilloscope. Plot the curve indicating critical points.

2. Set up the circuit in the figure for $R = 150\ \Omega$, $C = 100\,\mu$F. For maximum and minimum R_L, measure the maximum and minimum values of I_L and V_L.

3. Connect a $R_p = 1\,k\Omega$ potentiometer in series with the resistor R. Varying the R_p, determine the values of branch voltage $V_{\max}$, and $V_{\min}$. For $V = V_{\max}$, measure $V_{L,\,\min}$ and $V_{L,\,\max}$ by changing R_L. For $V = V_{\min}$, measure $V_{L,\,\min}$ and $V_{L,\,\max}$ by changing R_L.

2 Answers

1. The graph is given below.

Graph 1: Zener diode characteristics

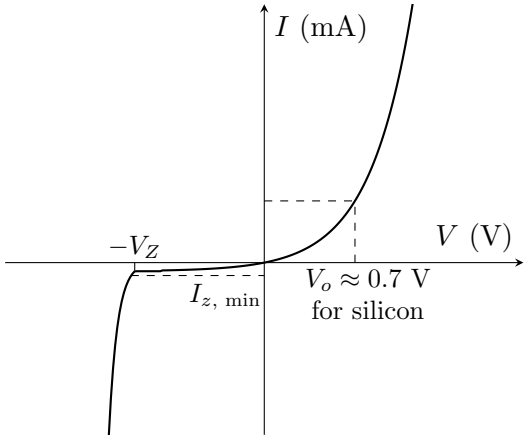

The Zener diode is essentially a silicon diode intentionally modified to cause a breakdown at a specific voltage $-V_Z$, and it provides a constant voltage within a certain range of current in the reverse bias mode.

2. The peak voltage across the secondary side: $V_m = 220 \cdot \frac{12}{220}\sqrt{2} = 12\sqrt{2}$ V. If we assume the ripple voltage is 0, then

$$V_1 = V_m - 2V_{D,\text{ ON}} = 12\sqrt{2} - 2 \cdot 0.7 \approx 15.57 \text{ V}.$$

3. For $I_{L,\text{ min}}$, the load resistance should be high, and vice versa for $I_{L,\text{ max}}$.

$$I_{L,\text{ min}} = \frac{V_Z}{R_{L,\text{ max}}} = \frac{7.5}{5220} = 1.44 \text{ mA}, \qquad I_{L,\text{ max}} = \frac{V_Z}{R_{L,\text{ max}}} = \frac{7.5}{220} = 34.10 \text{ mA}.$$

4. The voltage across the resistor R:

$$V_R = V = V_1 - V_Z = 15.57 - 7.5 = 8.07 \text{ V}.$$

For the Zener diode to dissipate maximum power,

$$I_{Z,\text{ max}} = \frac{P_{z,\text{ max}}}{V_Z} = \frac{0.5}{7.5} = 66.67 \text{ mA}.$$

By KCL,

$$I_{Z,\text{ max}} = I_{R,\text{ max}} - I_{L,\text{ min}} \implies I_{R,\text{ max}} = I_{Z,\text{ max}} + I_{L,\text{ min}},$$

$$I_{R,\text{ max}} = 66.67 + 1.44 = 68.11 \text{ mA} \implies R_{\text{min}} = \frac{V}{I_{R,\text{ max}}} = \frac{8.07}{68.1 \times 10^{-3}} = 118.48\,\Omega.$$

5. The condition for the Zener diode to burn: $I_Z > I_{Z,\text{ max}}$. By Ohm's law,

$$V_{1,\text{ burn}} - V_Z = I_{R,\text{ max}} \cdot R = (I_{Z,\text{ max}} + I_{L,\text{ min}}) \cdot R,$$

$$V_{1,\text{ burn}} = (66.67 + 1.44) \cdot 150 + 7.5 = 17.72 \text{ V}.$$

Simulation

2. The circuit:

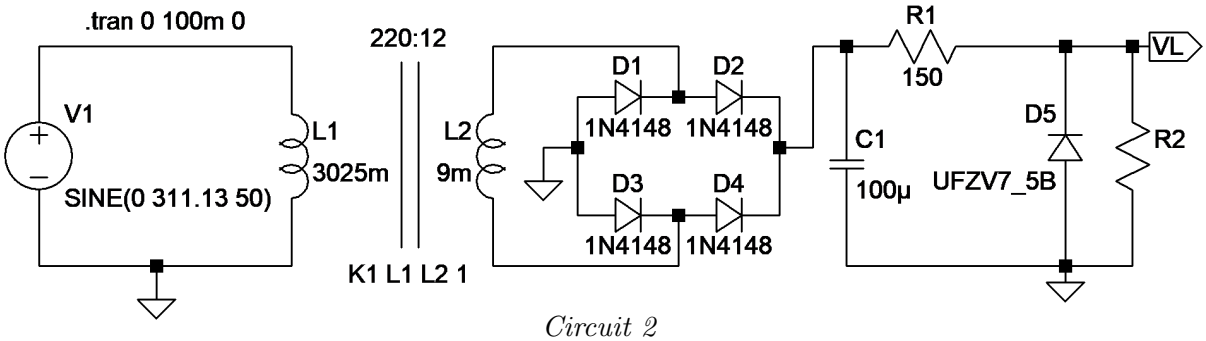

Circuit 2

The minimum and maximum values:

For $R_L = 220\,\Omega$,

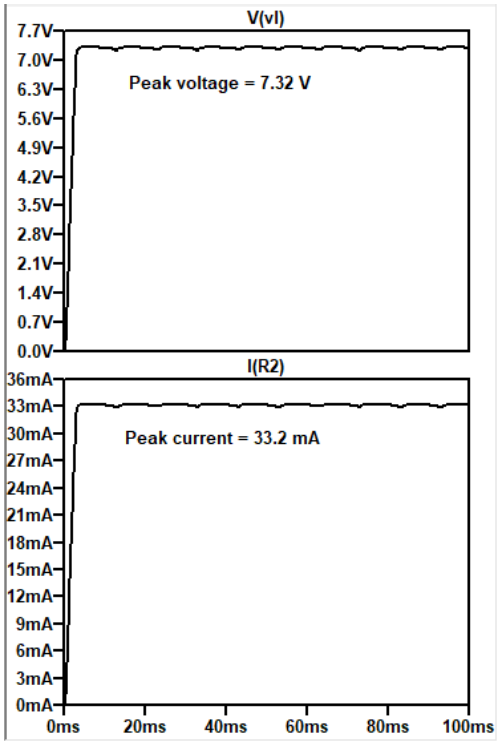

Graphs 2 & 3: V_L and I_{R_L}

For $R_L = 5220\,\Omega$,

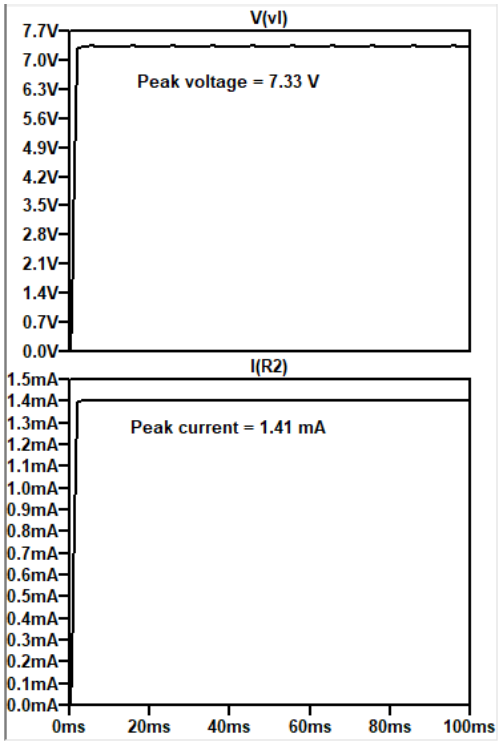

Graphs 4 & 5: V_L and I_{R_L}

3. The circuit for $R_L = 220\,\Omega$:

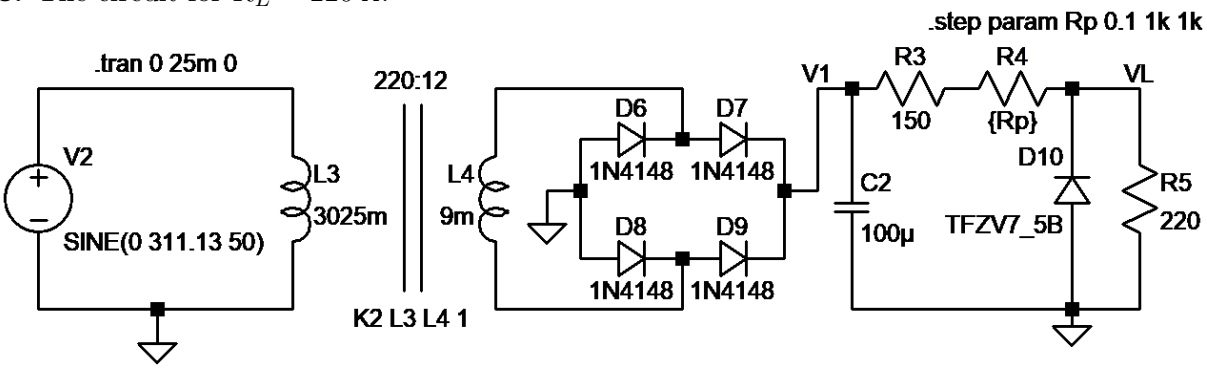

Circuit 3

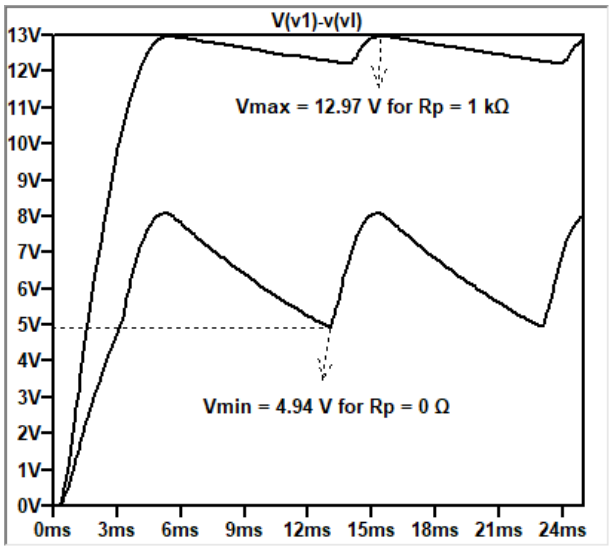

Graph 6: Circuit 3 graphed

Note that the value of V_{min} is almost identical to the one for when $R_L = 5220\,\Omega$. Therefore, take $V_{\text{min}} = 4.94$ V.

For $V = V_{\text{max}}$, the circuit and its graph are given below.

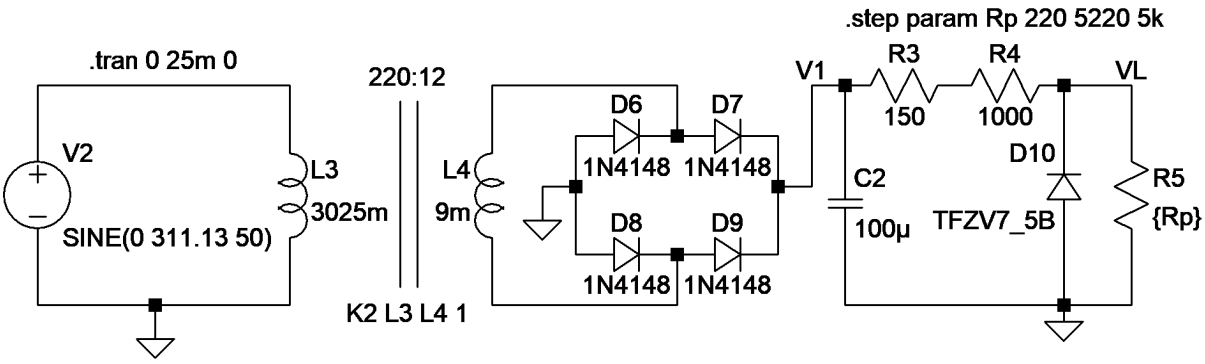

Circuit 4

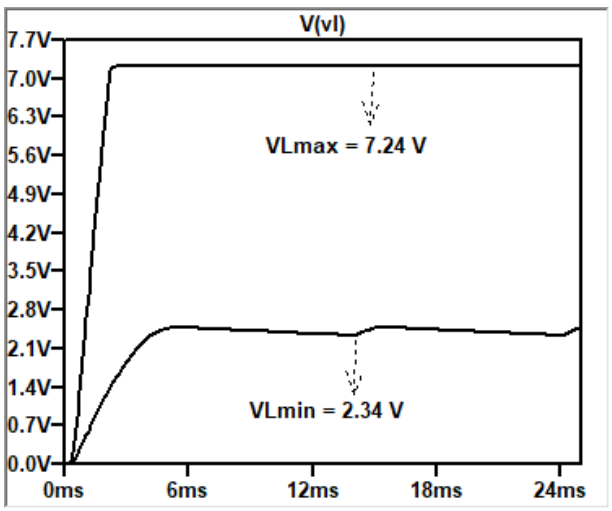

Graph 7: Circuit 4 graphed

$V_{L,\,\text{min}} = 2.34$ V obtained for $R_L = 220\,\Omega$ and $V_{L,\,\text{max}} = 7.24$ V obtained for $R_L = 5220\,\Omega$.

For $V = V_{\text{min}}$, the circuit and its graph are given below.

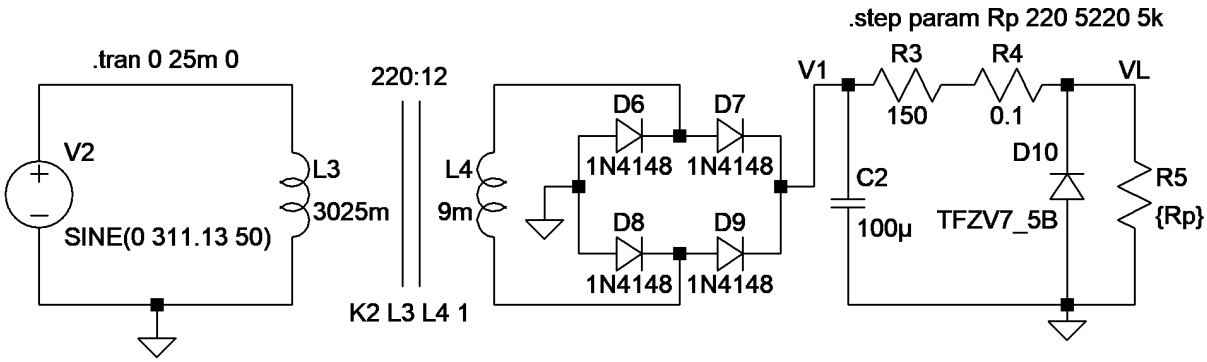

Circuit 5

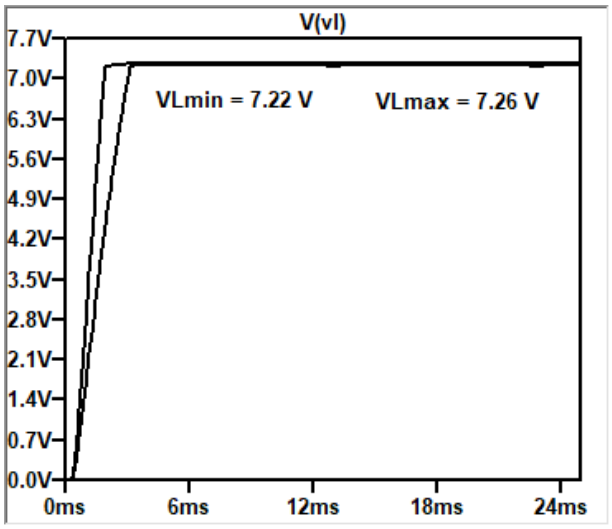

Graph 8: Circuit 5 graphed

$V_{L,\,\text{min}} = 7.22$ V obtained for $R_L = 220\,\Omega$ and $V_{L,\,\text{max}} = 7.26$ V obtained for $R_L = 5220\,\Omega$.